Bangladesh Army University of Engineering & Technology
Department of Electrical & Electronic Engineering

Lecture: 15

Course Code: EEE 1261

Course Title: Electronic Devices and Circuits

Course Teacher: Ferdous Farjana

Designation: Lecturer, Dept. of EEE, BAUET

Reference Books

- **Electronic Devices and Circuit Theory: Robert L. Boylestad and Louis Nashelsky.**
- Electronic Principles: Albert P. Malvino.
- Micro Electronics Circuits: Adel S. Sedra & Keneth C. Smith: Oxford University Press.
- Operational Amplifiers and Linear Integrated Circuits: Robert F. Coughlin: Prentice Hall of India Private Limited.

2.5 AND/OR GATES

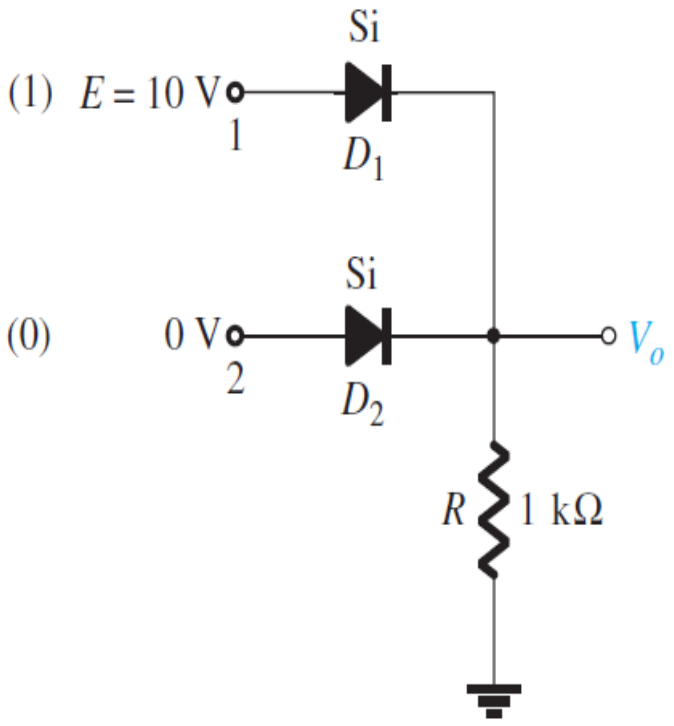

FIG. 2.39
Positive logic OR gate.

The tools of analysis are now at our disposal, and the opportunity to investigate a computer configuration is one that will demonstrate the range of applications of this relatively simple device. Our analysis will be limited to determining the voltage levels and will not include a detailed discussion of Boolean algebra or positive and negative logic.

The network to be analyzed in Example 2.14 is an OR gate for positive logic. That is, the 10-V level of Fig. 2.39 is assigned a "1" for Boolean algebra and the 0-V input is assigned a "0." An OR gate is such that the output voltage level will be a 1 if either *or* both inputs is a 1. The output is a 0 if both inputs are at the 0 level.

The analysis of AND/OR gates is made easier by using the approximate equivalent for a diode rather than the ideal because we can stipulate that the voltage across the diode must be 0.7 V positive for the silicon diode to switch to the "on" state.

In general, the best approach is simply to establish a "gut" feeling for the state of the diodes by noting the direction and the "pressure" established by the applied potentials. The analysis will then verify or negate your initial assumptions.

EXAMPLE 2.14 Determine V_o for the network of Fig. 2.39.

Solution: First note that there is only one applied potential; 10 V at terminal 1. Terminal 2 with a 0-V input is essentially at ground potential, as shown in the redrawn network of Fig. 2.40. Figure 2.40 "suggests" that D_1 is probably in the "on" state due to the applied 10 V, whereas D_2 with its "positive" side at 0 V is probably "off." Assuming these states will result in the configuration of Fig. 2.41.

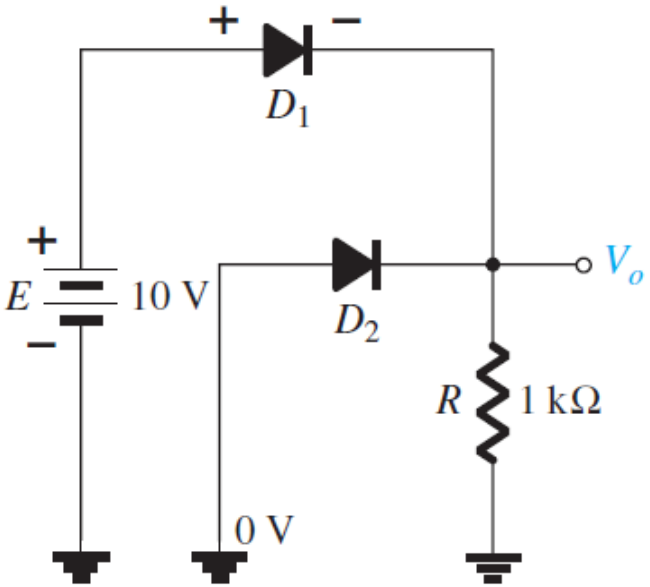

FIG. 2.40
Redrawn network of Fig. 2.39.

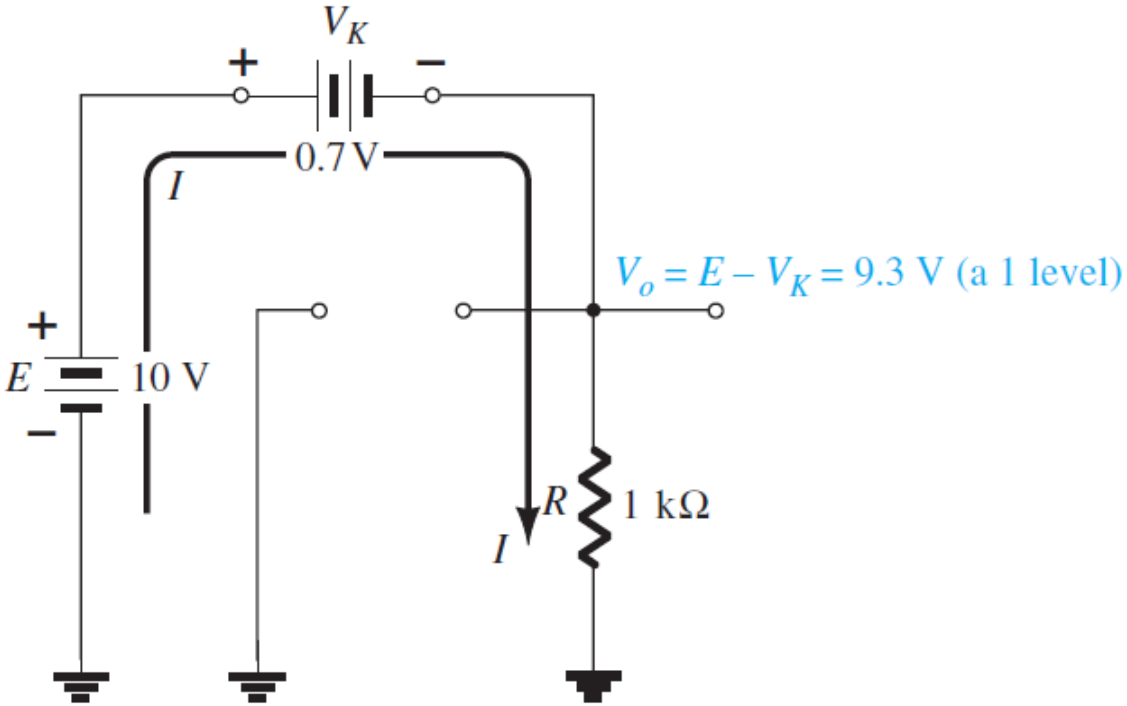

FIG. 2.41
Assumed diode states for Fig. 2.40.

The next step is simply to check that there is no contradiction in our assumptions. That is, note that the polarity across D_1 is such as to turn it on and the polarity across D_2 is such as to turn it off. For D_1 the "on" state establishes V_o at $V_o = E - V_D = 10\text{ V} - 0.7\text{ V} = \mathbf{9.3\ V}$. With 9.3 V at the cathode (−) side of D_2 and 0 V at the anode (+) side, D_2 is definitely in the "off" state. The current direction and the resulting continuous path for conduction further confirm our assumption that D_1 is conducting. Our assumptions seem confirmed by the resulting voltages and current, and our initial analysis can be assumed to be correct. The output voltage level is not 10 V as defined for an input of 1, but the 9.3 V is sufficiently large to be considered a 1 level. The output is therefore at a 1 level with only one input, which suggests that the gate is an OR gate. An analysis of the same network with two 10-V inputs will result in both diodes being in the "on" state and an output of 9.3 V. A 0-V input at both inputs will not provide the 0.7 V required to turn the diodes on, and the output will be a 0 due to the 0-V output level. For the network of Fig. 2.41 the current level is determined by

$$I = \frac{E - V_D}{R} = \frac{10\text{ V} - 0.7\text{ V}}{1\text{ k}\Omega} = \mathbf{9.3\ mA}$$

EXAMPLE 2.15 Determine the output level for the positive logic AND gate of Fig. 2.42. An AND gate is one where a 1 output is only obtained when a 1 input appears at each and every input.

Solution: Note in this case that an independent source appears in the grounded leg of the network. For reasons soon to become obvious, it is chosen at the same level as the input logic level. The network is redrawn in Fig. 2.43 with our initial assumptions regarding the state of the diodes. With 10 V at the cathode side of D_1 it is assumed that D_1 is in the "off" state even though there is a 10-V source connected to the anode of D_1 through the resistor.

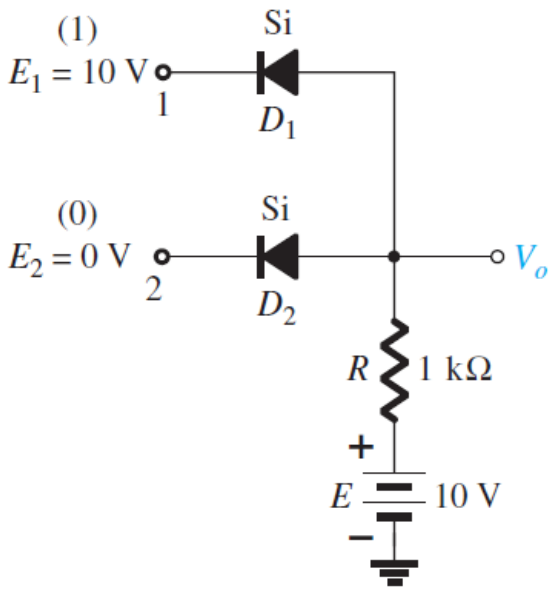

FIG. 2.42
Positive logic AND gate.

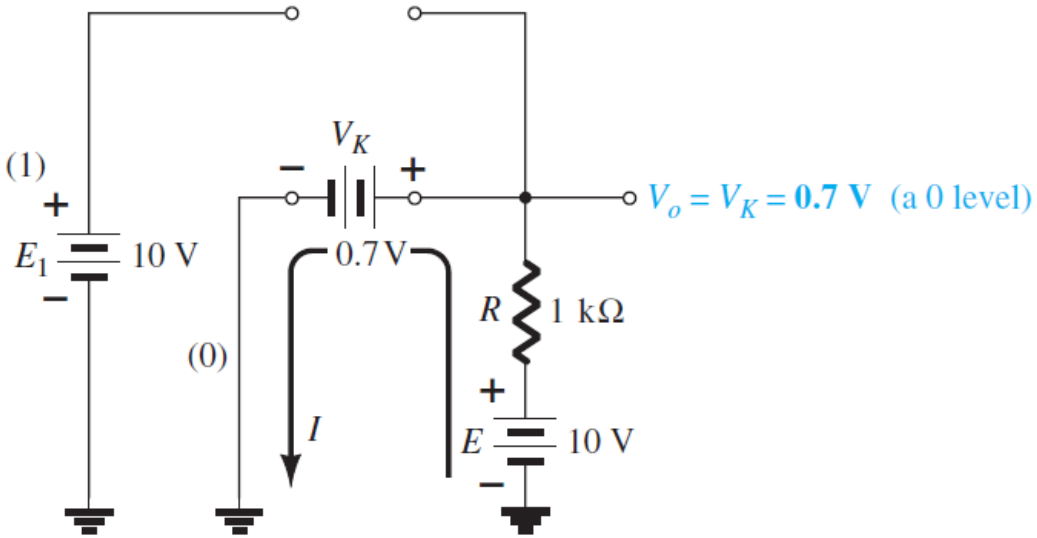

FIG. 2.43
Substituting the assumed states for the diodes of Fig. 2.42.

However, recall that we mentioned in the introduction to this section that the use of the approximate model will be an aid to the analysis. For D_1, where will the 0.7 V come from if the input and source voltages are at the same level and creating opposing "pressures"? D_2 is assumed to be in the "on" state due to the low voltage at the cathode side and the availability of the 10-V source through the 1-kΩ resistor.

For the network of Fig. 2.43 the voltage at V_o is 0.7 V due to the forward-biased diode D_2. With 0.7 V at the anode of D_1 and 10 V at the cathode, D_1 is definitely in the "off" state. The current I will have the direction indicated in Fig. 2.43 and a magnitude equal to

$$I = \frac{E - V_K}{R} = \frac{10\text{ V} - 0.7\text{ V}}{1\text{ k}\Omega} = \mathbf{9.3\text{ mA}}$$

The state of the diodes is therefore confirmed and our earlier analysis was correct. Although not 0 V as earlier defined for the 0 level, the output voltage is sufficiently small to be considered a 0 level. For the AND gate, therefore, a single input will result in a 0-level output. The remaining states of the diodes for the possibilities of two inputs and no inputs will be examined in the problems at the end of the chapter.

Home Work

1. Determine V_O for the negative logic OR gate of Fig. 1.
2. Determine V_O for the negative logic AND gate of Fig. 2.

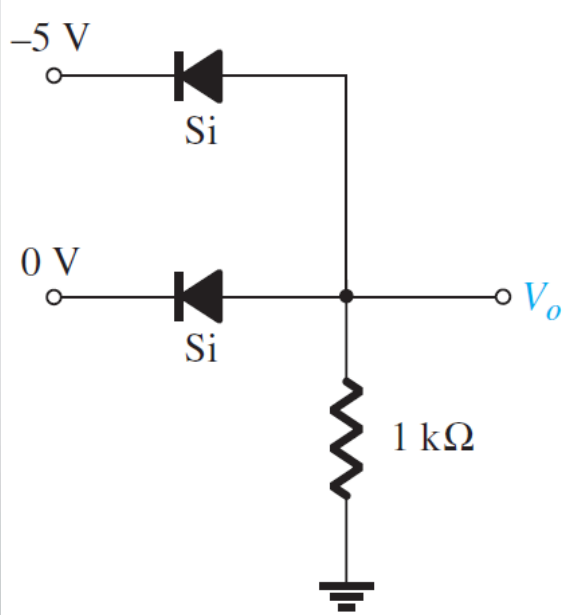

Fig. 1

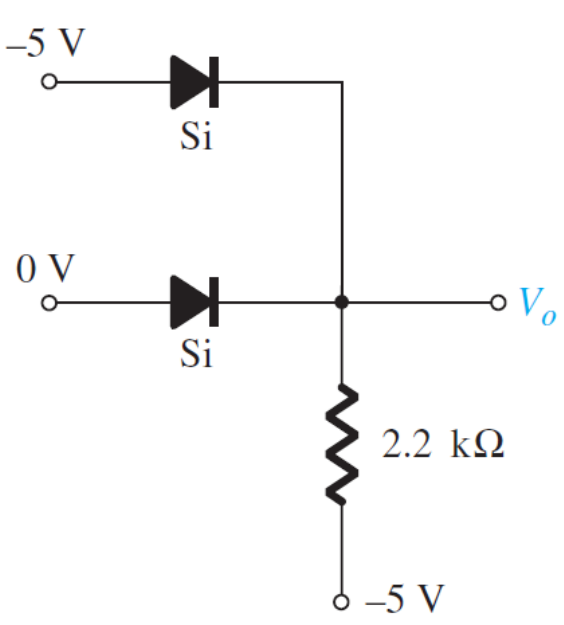

Fig. 2

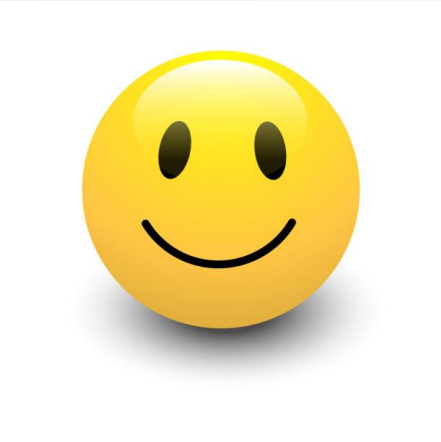

THANK YOU